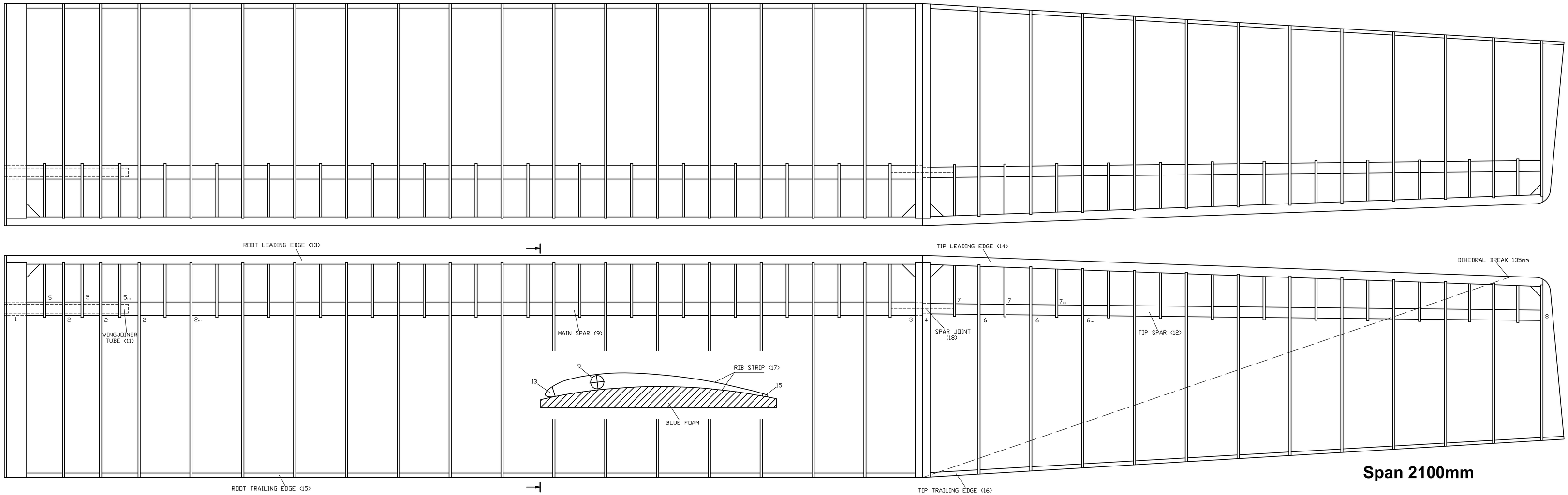


# F1A *SIJA* Model Kit
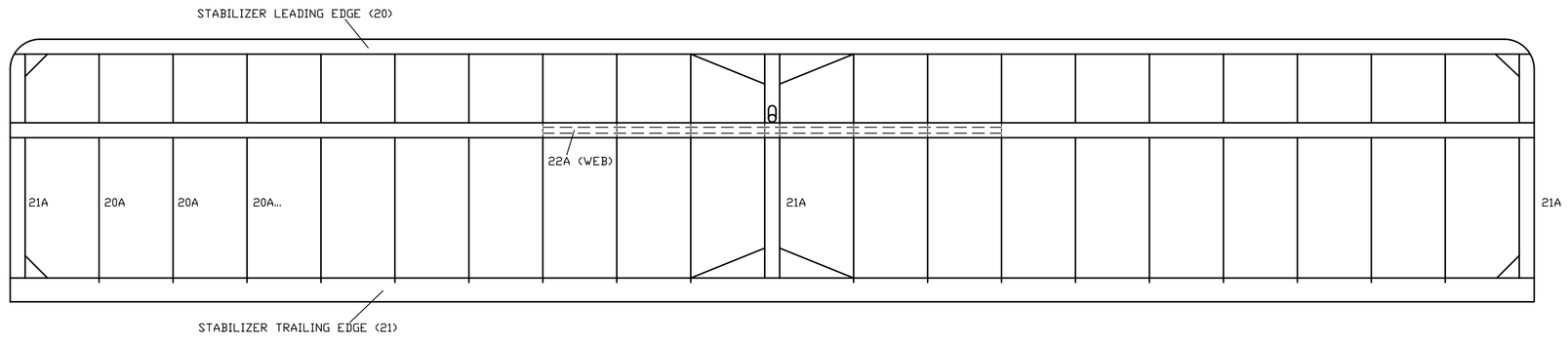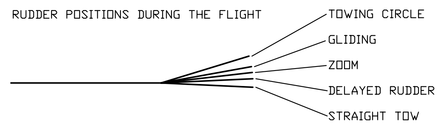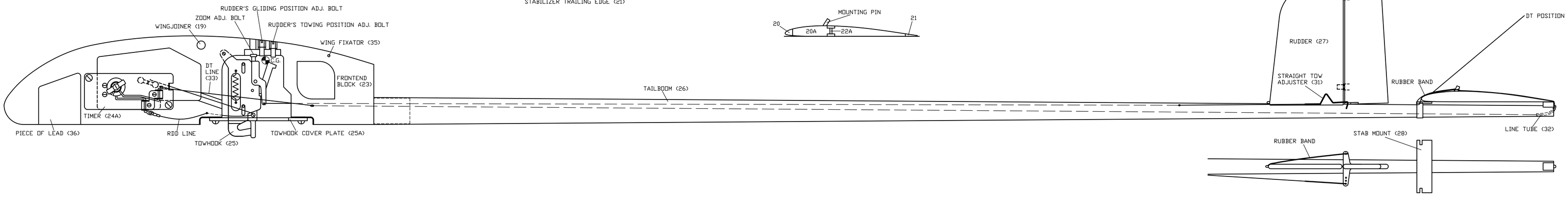
Production by WHobby